ALYA

Gabriele Rosa

Light pendant LED lamp with diffused lighting, with 70% uplight and 30% downlight output. Arms in extruded aluminium, central body in die-casted aluminium. Diffuser in opaline methacrylate. Available in white or matt black. Dimmable also with remote control.

LED

LAMPING

Source	linear LED
Total power	37,5W
Emission	uplight, diffused
Switching	dimmable, DALI, Push
Tension	220V
Color temperature	3000K
Luminous flux	2130lm (luminous output)
Typ cri	83
Energy class	A+
Materials	aluminium + PC
Notes	cable lenght 2,5m

Codes	*Structure*
ALY LWW 51	white
ALY LNN 51	black

PACKAGE

Package 01	16x64x47 cm / Gross weight: 4,5 Kg

Certificazioni

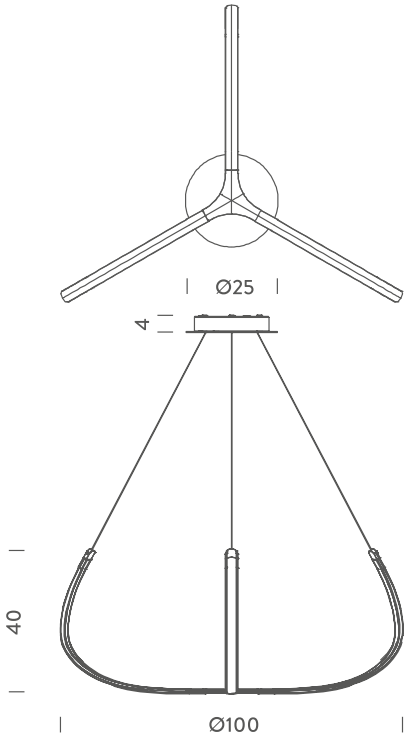

REMOTE CONTROL LED

LAMPING

Source	linear LED
Total power	37,5W
Emission	uplight, diffused
Switching	dimmable, 1-10V, remote
Tension	220V
Color temperature	3000K
Luminous flux	2130lm (luminous output)
Typ cri	83
Energy class	A+
Materials	aluminium + PC
Notes	cable lenght 2,5m

Codes	*Structure*
ALY LWW 52	white
ALY LNN 52	black

PACKAGE

Package 01	16x64x47 cm / Gross weight: 4.5 Kg
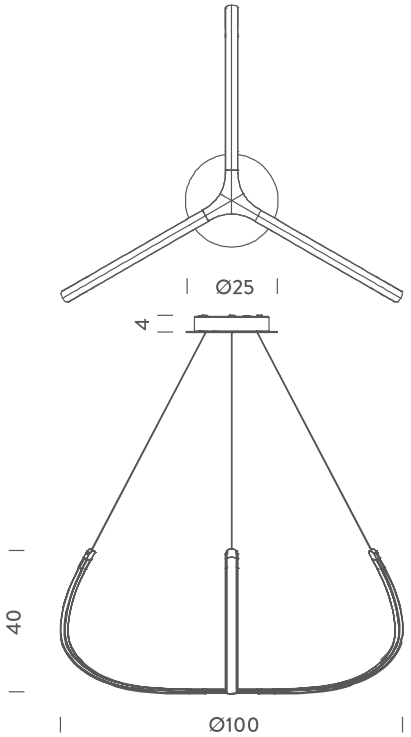
Certificazioni